# Direct Coupled, Non-Spring Return Actuators, 135 in-lb

INTEC CONTROLS

**GA-T135-024**
**Tri-state or On/Off**

## DESCRIPTION

Electronic, motor-driven, reversible, noiseless, direct coupled actuators.

## APPLICATION

Actuators to be easily installed by direct shaft mounting on air dampers, shutters and butterfly valves in ventilation and air conditioning systems. Can be controlled by any compatible electric or electronic analog controller, DDC/PLC control or automation system.

CE

ISO 9001

c UL us LISTED

## FEATURES

- *Direct coupled, easy to install*
- *Ridged V-clamp connector for better shaft gripping*
- *Optional, aux. switches or feedback pot*
- *Tested for 60,000+ full operations*
- *Manual override*
- *Overload protected*
- *Maintenance-free*
- *Five-year warranty*

## SPECIFICATIONS

| | |
|---|---|
| **Control** | |
| Input signal | Tri-state (3-pt. floating) or On/Off, 24 VAC/DC |
| **Electrical** | |
| Power supply | 24 VAC/VDC ± 20%, 50/60 Hz |
| Over voltage | Up to 40 V, max. 5 sec. |
| Power consumption | 4.5 W (8.0 VA) |
| **Performance** | |
| Torque | 135 in-lb (15 Nm) |
| Damper size | Up to 34 sq. ft. (3 m²) |
| Angle of rotation | 0-95°/95-0°, selectable |
| - CCW(L) and CW(R) | L/R selector, built-in actuator cover |
| Rotation time | 40 to 80 sec/0-90° |
| Power failure | Stays in last position of operation |
| Position indicator | 0-90° divisions and adj. visual indicator |
| Synchronization | ± 1% |
| Overload protection | Electronic throughout rotation |
| Manual override | Built-in disengage button |
| Motor type | DC motor |
| Noise level | Max. 40 dB(A) |
| **Environmental** | |
| Permissible ambient | |
| - working temperature | -22°F to 122°F (-30°C to 50°C) |
| - storage temperature | -40°F to 176°F (-40°C to 80°C) |
| - humidity | 5-95% RH, non-condensing |

| | |
|---|---|
| **Physical** | |
| Enclosure | |
| - cover | ABS, UL 94-5V |
| - base | PA 6.6 |
| - color | Grey and black |
| - protection | NEMA 2 |
| Mounting position | Any position |
| Anti-rotation bracket | Included w/actuator |
| Stacking/paralleling | Refer to table "Multiple Actuators" |
| Clamp connection to | |
| - round shaft | Ø 5/16" to 5/8" (8 to 16 mm) |
| - square shaft | ☐ 5/16" to 15/32" (8 to 12 mm) |
| Wire connection | 3 ft. (0.9 m) appliance cable, color coded |
| - option, on request | Plenum rated cable |
| Wire size | 18 AWG (0.75 mm²) |
| Conduit connector | 1/2", built-in |
| Dimensions | 5.51 x 2.95 x 2.28 in. (140 x 75 x 58 mm) |
| Weight | 1.6 lbs. (0.7 kg) |
| **Manufacturing** | ISO 9001 certified |
| **Listings/Approvals** | CE<br>UL and CSA |
| **Warranty** | Five-year material and workmanship (Two-year standard, three-year conditional) |

## OPTIONS

| | | |
|---|---|---|
| - **S2** | (2) Aux. switches built-in | SPDT 24 VAC, 5 (2.5) A, adj. at any position, incl. 3 ft. (0.9 m) appliance cable, number coded, and 1/2" conduit connector |
| - **P1** | (1) Feedback pot | 1 kΩ pot, incl. 3 ft. (0.9 m) appliance cable, number coded, and 1/2" conduit connector |

## ORDERING INFORMATION

| | |
|---|---|
| **GA-T135-024** | Standard |
| **GA-T135-024-S2** | w/(2) Aux. switches |
| **GA-T135-024-P1** | w/(1) 1 kΩ Pot |

## DIMENSIONS

inches (mm)

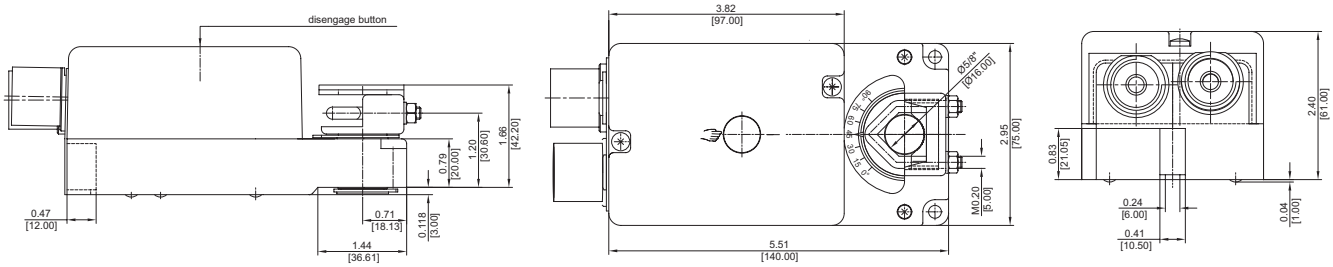


*Note: Anti-rotation mounting bracket supplied w/actuator*

## WIRING CONFIGURATION

**GA-T135-024** Tri-state (3-point floating) control

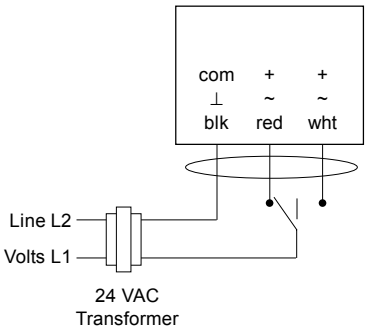


**GA-T135-024** On/Off control

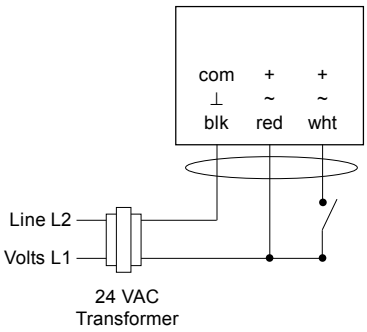


| **Multiple Actuators** (maximum quantities) | **GA-T135-024** Tri-state or On/Off |
|---|---|
| Stacking (torque is additive) | 4* |
| Parallel connection | 20 |

* Stacking options for continuous control

Sum of total torque:

2 actuators = (2 x 100%)
3 actuators = (2 x 100%) + (1 x 80%)
4 actuators = (2 x 100%) + (1 x 80%) + (1 x 50%)

Option **S2**

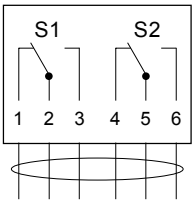


(2) Auxiliary switches, SPDT, 24 VAC, 5 (2.5) A, w/ adjustable cam for any position setting

Option **P1**

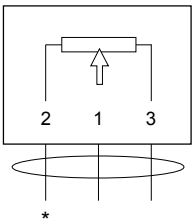


(1) Feedback pot, 1 kΩ,
* = 0 Ω at 0° angle of rotation

**L/R selector** (built-in actuator cover)

| Select | Angle of rotation |
|---|---|
| R | CW/0-90° w/red connect |
| R | CCW/90-0° w/white connect |
| L | CW/0-90° w/white connect |
| L | CCW/90-0° w/red connect |

Notes:
- Actuators are provided with color coded wires. Wires for optional switches and feedback pot are number coded.
- Observe polarity on secondary transformers. Incorrect polarity can cause controller damage or operation error.
- Provide overload protection for line voltage and disconnect as required.