Oxygen (O_2) Gas Monitor

ITS-M5130-R

DESCRIPTION

Gas monitor with built-in oxygen (O_2) sensor, wall-mounted, for binary/relay output control.

APPLICATION

To detect and control levels of oxygen (O_2) depletion or escalation in a wide variety of commercial and industrial applications such as unoccupied mechanical or chiller rooms, laboratories, food production areas, and ventilation systems, etc. The monitor's binary/relay outputs can control fans, remote alarms and other devices.

FEATURES

- *Continuous monitoring*
- *One (1) built-in O_2 electrochemical sensor, gas specific*
- *Two-stage relay outputs, w/status LEDs*
- *Built-in alarm horn (buzzer)*
- *Liquid Crystal Display (LCD)*
- *Push button programming*
- *Easy maintenance*

SPECIFICATIONS

Electric	
Power supply	24 VAC (12-28 VAC), floating, 50/60 Hz, 24 VDC (15-40 VDC)
Protection	Two (2) 2.0 A, socketed pico fuses
Power consumption	< 2 VA (100 mA) 250 mA turn-on surge
Sensor Performance	
Gas detected	Oxygen (O_2)
Sensor element	Electrochemical, diffusion
Range	0-25% v/v O_2, factory set Span field adjustable via calibration
Accuracy	± 2.5% of reading
Repeatability	± 1% of reading
Output drift	Max. 5% of full scale/year
Response time	< 60 seconds to 90% of step change
Sensor life expectancy	2 years, normal operating environment
Sensor coverage	2,500 sq.ft., max. 5,000 sq.ft. (232 m², max. 465 m²), "under ideal conditions"
Installation Location	
Mounting height	5 to 6 ft. (1.5 to 1.8 m) above floor
Type of Control	
General	Single-stage or two-stage, two-position control, alarm levels/setpoints assignable over full O_2% v/v range
Relay outputs (TB5 & TB6)	
- type	(2) SPDT, dry contacts
- contact rating	115 VAC / 30 VDC, 1.0 A, contact resistance 50 mΩ, max.
- switching differential	Adjustable, individual for cut-in and cut-out per relay
- differential between relays	Adjustable
- time delays	0-60 minute(s) in 5-minute increments on or off, selectable switching for each cut-in and cut-out; 0 minute factory set
Audible alarm (buzzer)	Built-in, 85 db within 1 ft., enabled or disabled selectable; assignable to low or high alarm setpoint
Digital Display	LCD, two lines x 8 characters, 1 digit resolution, displays O_2 % v/v values
Programming	Alarm level/setpoint set-up, differential, time delay and audible alarm via (3) push buttons and LCD display
Environmental	
Permissible ambient	
- working temperature	-4°F to 104°F (-20°C to 40°C)
- storage temperature	32°F to 68°F (0°C to 20°C)
- humidity, continuous	15 to 90% RH, non-condensing
- humidity, intermitted	0 to 99% RH, non-condensing
- working pressure	Atmospheric ± 10%
Physical	
Enclosure	
- material	Polycarbonate, ABS blend, fire-retardant, UL-V0
- color	Cool gray, 2U pantone
- cover	Snap-on, secured by (2) screws
- protection	NEMA 1, general purpose
- installation	Wall (surface) mounted, or single gang electrical box

SPECIFICATIONS

Physical (cont…)

Dimensions (H x W x D)	6.0 x 3.5 x 1.09 in. (152 x 89 x 28 mm)
Cable entry	1 hole on back side of base plate for single gang electrical box mounting
Wire connection	Terminal blocks, screw type for lead wire
Wire size	Min. 26 AWG (0.4 mm^2) Max. 16 AWG (1.3 mm^2)
Weight	0.5 lbs. (0.3 kg)

Warranty	12 months material and workmanship

ORDERING INFORMATION

ITS-M5130-R	O_2 Monitor, 0-25% v/v, (2) SPDT 1 A relays, buzzer, LCD, wall-mount

FIELD WIRING CONFIGURATION

ITS-M5130-R

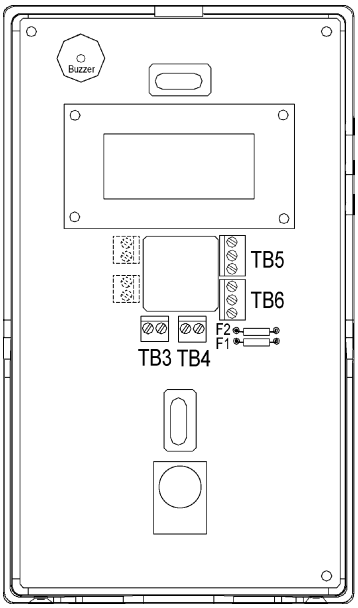

TB5 and **TB6** Staged Relay Output Control w/Status LEDs

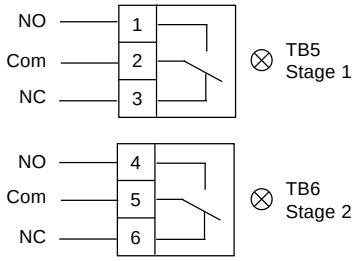

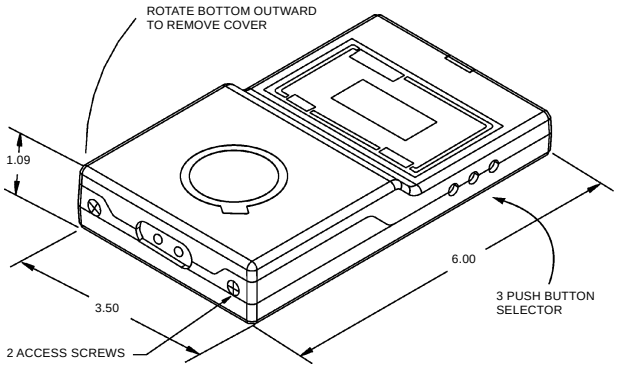

TB3 and **TB4** Power Supply 24 VAC or 24 VDC

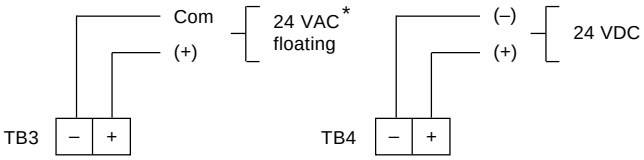

* Do not connect 24 VAC to earth ground
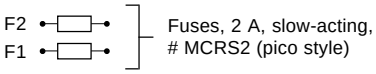
F1 and **F2** Fuses