INTEC CONTROLS

Powered by BUILDING CONTROLS & SOLUTIONS

Step 1

WAIT! Perform these steps **before** powering up the unit

Please read through this entire document before attempting Installation Verification!

DGC5

Quickstart

Installation Verification Guide

Installation Verification

(See the DGC5 User Manual for additional information)

1. Verify that the DGC5 Controller is mounted at eye level and has adequate unobstructed clearance around the unit.
2. Verify that the working ambient temperature of the space is within the operating parameters of the Controller: 23°F to 104°F (-5°C to 40°C).
3. At the electrical panel, verify and record dedicated 120 Volt power circuit for the Controller. ***Important: Do not turn on power breaker in DGC5 during installation procedures!***

Voltage Reading (VAC)

4. Verify trunk cable is Connect-Air #W184C-2059B cable or equivalent (18 AWG, 4-conductor, two individually shielded twisted pair (STP), all wires different colors). Recommend red & black for DC power transmission and any other 2 colors for the RS-485 communication transmission.
5. **Important:** The trunk cable polarity must be maintained from Controller to each digital transmitter. *(Illustration 1)*
6. **Important:** The trunk cable wiring must be daisy-chained: Controller to transmitter, then transmitter to transmitter; "t-drop" wire-splitting and "star" configurations not allowed. Each transmitter should have 4 wires coming in and 4 wires leaving. At the transmitter the DC power (+) is on terminal block X4 terminal 1 and DC power (-) is on terminal 2. The RS-485 communication wire A is on terminal 6 and wire B on terminal 7. *(Illustrations 1 & 2)*
7. **Important:** The cable shields must be continuous and not grounded at any point along the communication run. The shields should be taped so there is no possibility of shorting to ground in the sensor housings. The communication cable shields should be taped back at the Controller. Do not cut them off because it may be necessary to ground them to earth ground if communication problems are experienced. **NOTE:** Systems installed in conduit will have better noise immunity even if it is not required by local code.
8. When installing the sensor housing verify that the address number is labeled on the outside of the housing and on the sensor printed circuit board. Sensor addresses must be in sequential order per provided riser diagram to simplify communication troubleshooting and ensure proper zone control. Sensor boards should be kept in a safe location while the housings are being installed. **NOTE:** The printed circuit boards should <u>not</u> be inserted into their enclosures until Step 15.
9. Confirm that a 560 ohm resistor was manually installed across the RS-485 communication terminals A (6) & B (7) on the last device on each trunk in the system. *(Illustration 2)*
10. An analog transmitter may be connected to each digital transmitter in either a 2-wire or 3-wire configuration, depending on the gas type. The power (+) to the analog sensor comes from the digital sensor terminal block X4 terminal 3. The 4-20 mA output signal from the analog sensor is connected to terminal block X4 terminal 5 on the digital sensor. In a 3-wire analog sensor, the DC power negative(-) is supplied from the digital sensor terminal block X4 terminal 2. *(Illustration 5)*
11. Measure and record below the actual length for each trunk in the system (up to 8). The maximum permissible length of the trunk is determined by the number and types of devices being powered. Refer to "DGC5 Power Consumption Worksheet" on the reverse side of this document to calculate the maximum trunk length. If the actual trunk length is longer than the calculated maximum trunk length, a repeater/power booster is required.

Calculate the Length (ft.) of Each Trunk			
1:	3:	5:	7:
2:	4:	6:	8:
Total Length (ft.) =			

12. At the DGC5 Controller measure and record below the resistance (ohms) between the trunk cable RS-485 communication wires A and B for each trunk in the system. **NOTE:** All of the digital sensor printed circuit boards *must* be removed from their housings. Resistance should be greater than 560 ohms, but less than 640 ohms. *(Illustration 3)*

Measure and Record Resistance (ohms) of each trunk			
1:	3:	5:	7:
2:	4:	6:	8:

13. Check all trunk cable RS-485 communication wires A & B for shorts to ground. *(Illustration 4)*
14. If all measurements are within system parameters then terminate the trunk cable as follows: The DC power terminates on the CON5 module terminal block X2 terminals 1 (red) positive and 2 (black) negative; the RS-485 communication wire A terminates on the CON module X4 terminal block terminal 3 and wire B terminates on terminal 4. *(Illustration 1)*
15. After all construction and painting is complete and before starting up the system, install sensor printed circuit boards (PCB) into their numbered housings. Verify that the address on each PCB matches the address on each housing.

Installation Verification complete. Refer to Step 2: Commissioning Guide for system startup.

Technician/Installer's Name(s):	
Installation Date:	

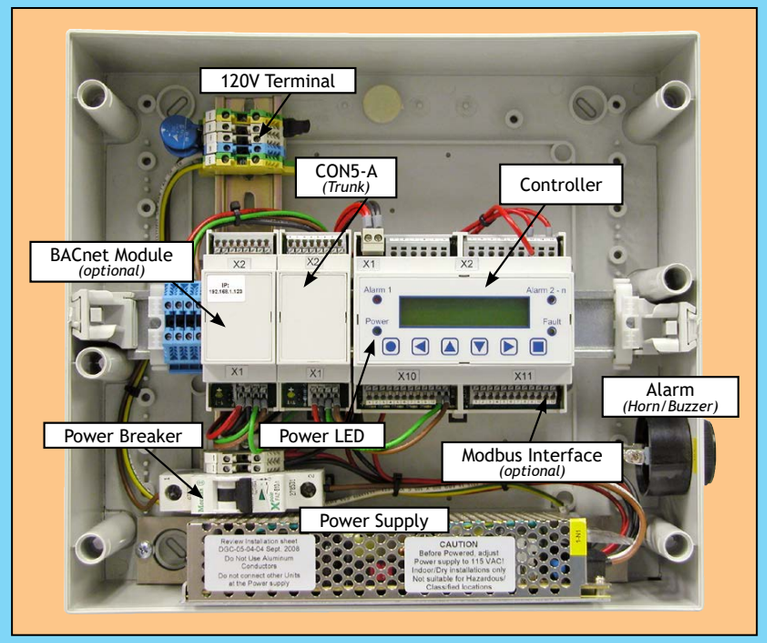

Illustrations & Diagrams

Illustration 1

Use Connect-Air #W184C-2059B cable or equivalent for the entire trunk; 18 AWG, 4-conductor, two individually shielded twisted pair (STP), all wires different colors.

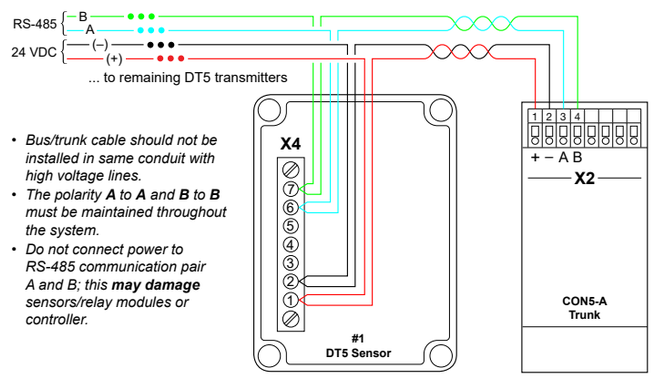

- *Bus/trunk cable should not be installed in same conduit with high voltage lines.*
- *The polarity **A** to **A** and **B** to **B** must be maintained throughout the system.*
- *Do not connect power to RS-485 communication pair A and B; this **may damage** sensors/relay modules or controller.*

Illustration 2

The trunk cable wiring must be daisy-chained to each transmitter. Each transmitter should have 4 wires coming into the transmitter and 4 wires leaving. "Drops", "T's", "stars" or other wire-splitting of the communication lines are not permitted.

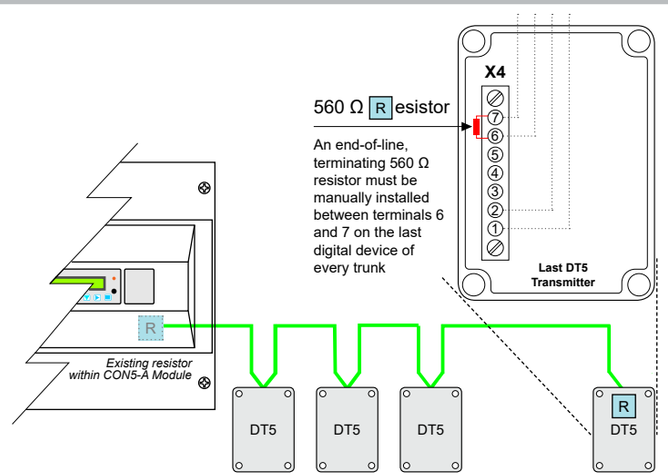

Illustration 3

Communication wires must be disconnected from Controller and all sensor boards removed from enclosure prior to measuring resistance. The measured result should be greater than 560 ohms but less than 640 ohms.

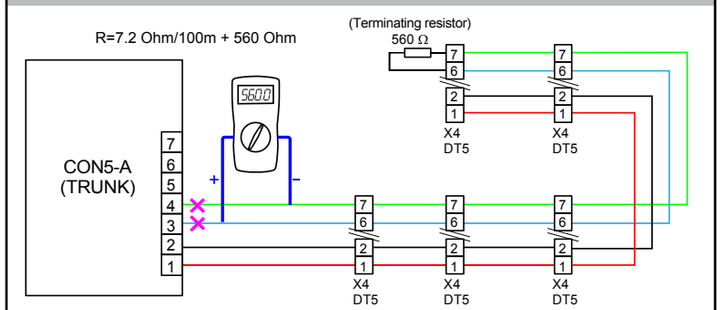

Illustration 4

Check all trunk cable RS-485 communication wires A & B for shorts to ground.

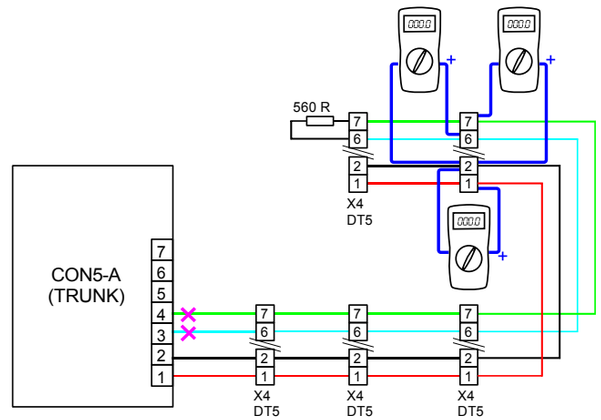

Illustration 5

AT transmitter (4-20 mA, analog sensor) piggybacked via DT5 transmitter (RS-485, digital sensor); 2-wire (loop powered, typical for AT-11XX) versus 3-wire (typical for AT-33XX); the configuration choice is determined by the AT model.

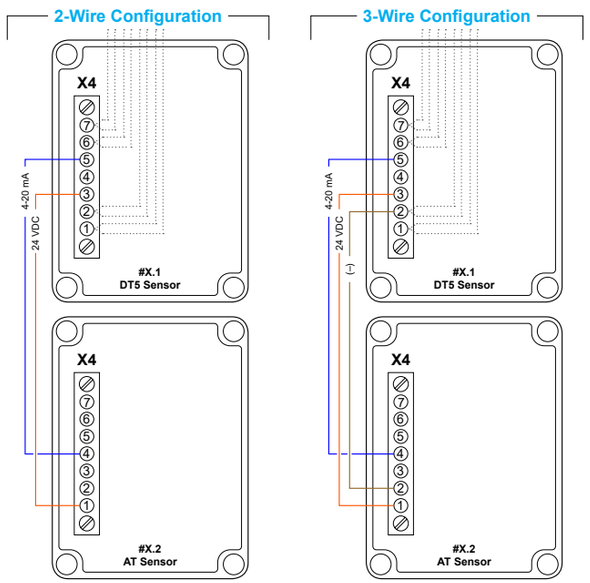

Power Consumption Worksheet

Use this worksheet to calculate the total power consumption of each trunk and select the maximum trunk length. If this total exceeds 1,000 mA, than a repeater/ power booster (REP5/PB5-PS1.5) will be necessary.

Unit Type	Unit Power Consumption (mA)		Number of Units		Power Consumption (mA)
DT5-11XX	10	X		=	
DT5-33XX	35	X		=	
AT-11XX	22	X		=	
AT-33XX	50	X		=	
DT5-XXXX w/heater	250	X		=	
AT-XXXX w/heater	250	X		=	
REL5-2R	70	X		=	
Others		X		=	
Total Power Consumption of Trunk (mA)					

Note! The total power consumption must not exceed 1,000 mA per trunk!

Total power consumption defines maximum trunk length

Max. Trunk Length (ft./m)		Total Power Consumption (mA)
2700 / 900	=	200
2400 / 800	=	250
2100 / 700	=	300
1800 / 600	=	350
1500 / 500	=	400
1200 / 400	=	500
900 / 300	=	650
750 / 250	=	800
600 / 200	=	1000