Multi-Point Gas Detection and Control System

INTEC CONTROLS

PolyGard
MGC2-12

City of Los Angeles Approved

NRTL Tested & Certified
Conforms to STD
UL 2017

UL 2075 *certified PolyGard Carbon Monoxide & Combustible Gas Transmitters are recommended for maximum system performance and reliability*

Upwards Communication Options
BACnet, Modbus

DESCRIPTION

Wall mounted, microprocessor-based, multi-point, analog electronic control system for various gas, temperature and humidity detection, control and alarm.

APPLICATION

To control and alarm upon the presence of any toxic, combustible and refrigerant gases. Any combination of the AT-11/3300 series or other 4-20 mA transmitters can be connected to the control unit. The controller can interface via binary outputs, a 4-20 mA signal, and/or an optional BACnet or Modbus port with any compatible electronic analog control, DDC/PLC control or automation system.

FEATURES

- *Continuous monitoring*
- *Twelve (12) analog inputs, 4-20 mA*
- *Four (4) digital inputs*
- *Fifteen (15) relay outputs:*
  - *Five-stage control*
  - *Fail-safe assignable*
- *Six (6) analog outputs, 4-20 mA*
  - *Selectable for low, high or averaging*
- *One (1) 24 VDC supply output*
- *Built-in horn*
- *Accepts combination of toxic or combustible gases, refrigerants, temperature or humidity sensor inputs*
- *Liquid Crystal Display (LCD)*
- *Optional BACnet or Modbus upwards communication to BAS*
- *LED status indicators*
- *Keypad user interface*
- *Simple menu-driven programming*
- *RFI/EMI protected*
- *Modular technology*
- *Overload & short-circuit protected*
- *Resettable breaker*
- *NEMA 4X enclosure*
- *Easy maintenance*

SPECIFICATIONS

Electric	
Power supply	120 VAC (90...230 VAC), 50/60 Hz resettable breaker, 24 VAC on request
Power consumption	40 VA, max.
RF/EMI protected	4.0 W @ 3 ft. (1 m) radiated
Type of Control	
General	Five-stage (S1 to S5) control, assignable up to fifteen (15) binary/relay output, i.e. Low-med-high-fault/fail-horn*, or low1-low2-med1-med2-high, or any other combinations (* = horn/audible alarm built-in and factory pre-configured to relay output “R15”)
Analog inputs	Twelve (12) 4-20 mA
Analog reading	Current and mean (average) value
Stage level / setpoint	Field adjustable over full range, five (5) per analog input, assignable to current or mean (average) value
- hysteresis/ switching differential	Selectable for each sensor point
Digital inputs	Four (4), each can be individually assigned to any relay (R1...R15).
- application	Remote audio/visual alarm reset or override function
Relay outputs (R1-R15) w/ status LEDs	Fifteen (15) SPDT, 8 A 24 VAC/VDC-250 VAC contact resistance 100 mΩ, max.
- each stage level (S1-S5)	Assignable to any relay
- sensor fail-safe	Assignable to any stage level
Time delay switching	Selectable for make and brake of each sensor point (SP1 to SP12) 0-9,999 seconds
VDC output supply	24 VDC, 0.5 A fused
Analog output	Six (6) independent 4-20 mA signal, 500 Ω max. load, selectable as low, high or averaging of sensor inputs
Audible alarm	85 db (10 ft), enabled or disabled, selectable; assignable to stage level S1, S2, S3, S4 or S5
Alarm acknowledgment	Menu-driven and system reset function for latched relays

SPECIFICATION

User Interface	
Keypad type	Refer to section "User Interface & Controller"
Touch buttons	Six (6)
Status LED's	Yellow: Fault (fail) Red: Alarm
Digital display	Liquid Crystal Display (LCD), two lines, 16 characters per line, 1 digit resolution, backlit
- unit display	Menu selectable, per sensor; ppm, %LEL, Vol%, °F, %RH, %, ppk, °C
BACnet Interface, optional*	Read status information via BACnet coupler and BACnet-Profile, BACnet-Services and BACnet BIBBs
Input scaling	
0-250 ppm CO	Coupler option "B"
0-100%	Coupler option "P"
Communication	TCP/IP 10/100 Mbits/sec
Connector	Ethernet RJ45
Interface	BACnet-Profile
Description	BACnet-Services "Who-is (execute)" "I-am (initiate)" "ReadProperty" "WriteProperty"
Object types	Version B1.2, B2.2
Modbus Interface, optional*	Read status Information via Modbus interface and Modbus function 16 and 03
Module	Integrated at Controller module
Communication	19200 baud 1 start-bit, 8 data-bits 1 stop-bit, no parity
Interface	Function 16
Description	Function 03
Addresses	
- 1000 to 1098	Current value internal, sensor 1-98
- 2000 to 2048	Current value external, sensor 1-98
- 3000 to 3098	Average value internal, sensor 1-98
- 0 to 6	Relay bits, relay 1 to 30
- 8 to 19	Analog outputs 1 to 12
Environmental	
Permissible ambient	
- working temperature	23°F to 104°F (-5°C to 40°C)
- storage temperature	-4°F to 104°F (-20°C to 40°C)
- humidity	15 to 95% RH, non-condensing
- working pressure	Atmospheric ± 10%

Physical	
Enclosure (panel)	
- material	Polycarbonate, impact resistance EN 50102/IK08, flammability rating UL 94-5V
- conformity	UL Type 1, UL 508 / UL 50 standards
- color	Light gray, smoked gray for cover
- protection	NEMA 4X (IP65)
- installation	Wall (surface) mounted
Dimensions (H x W x D)	
- base	16.9 x 12.0 x 5.7 in. (430 x 306 x 145 mm)
Cable entry	10 holes for 1/2 in. conduit, covered
Wire connection	Terminal blocks, Push-on connect and screw type for lead wire
Wire size	
- input	Min. 22 AWG (0.34 mm^2) Max. 16 AWG (1.50 mm^2)
- output	Min. 24 AWG (0.25 mm^2) Max. 14 AWG (2.50 mm^2)
Weight	12.0 lbs (5.5 kg)
Approvals / Listings	
- unit rating	NRTL Perf. Tested & Certified Conforms to STD ANSI/UL 2017 City of Los Angeles CE VDI 2053, C-No. 418791 EMC-Compliance 89/336/EWG
- enclosure (panel)	UL Listed, E75645
Warranty	Two years material and workmanship

(*) BACnet Interface: NRTL Certification to UL STD 61010-1 – "Pending"

ORDERING INFORMATION

MGC2 - 12 - 1500 US

Options	
00	No options
01	Key Lock w/2 keys
0L	Data Logging
B0	BACnet Upwards Communication Coupler “C5-BAC-98” for AT Transmitters (0-250 ppm CO)
P0	BACnet Upwards Communication Coupler “C5-BAC-98-1” for AT Transmitters (0-100%)
M0	Modbus Upwards Communication Port (integrated)

Standard control system, ordering part number:

MGC2 - 12 - 1500 US,
configuration includes:

Digital, programmable controller with
menu-driven key-pad user interface,
LCD & LEDs, 120 VAC (90...250 VAC) 50/60 Hz,
NEMA 4X enclosure

Inputs: (12) 4-20 mA
(4) Digital

Outputs: (15) Relays, SPDT, 8 A
(6) 4-20 mA
(1) 24 VDC, 0.5 A

USER INTERFACE & CONTROLLER

Keypad User Interface

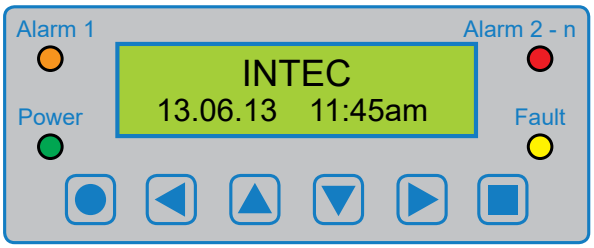

	Exits programming; returns to the previous menu level.
	Enters sub menus; saves parameter settings.
	Scrolls up & down within a menu; changes a value.
	Moves the cursor position.

Main Page & Main Menu

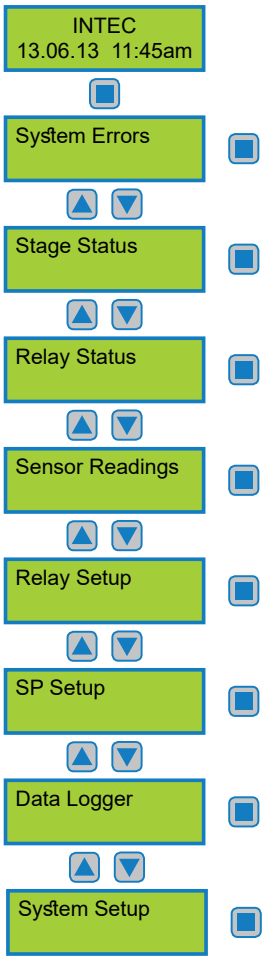

System Operation

All programming is made via the keypad user interface in combination with the display screen. Security is provided via two password levels. The lower level password (1234) allows to override or to reset system status functions. The upper level password (9001) allows all programming and override functions.

Main Page Display

After powered on, displays IN*TEC* and Date/Time and changes to sensor reading display unless a system error occurs; then the error is displayed.

Main Menu

Displays headings of “System Errors”, “Stage Status” “Relay Status”, “Sensor Readings”, “Relay Setup”, “SP (Sensor Point) Setup”, “Data Logger” and “System Setup”.

Sub Menu “System Errors”

Displays errors, reset corrected errors, and historical error summary.

Sub Menu “Stage Status”

Displays status of each “SP” sensor point, stage level/setpoint exceeded.

Sub Menu “Relay Status”

Displays status and manual control of each output relay.

Sub Menu “Sensor Readings”

The current or average values are displayed for each “SP” sensor point with sensing type and engineering unit (ppm, %LEL, Vol%, °F, %RH, %, ppk, °C).

Sub Menu “Relay Setup”

Enter and/or change parameters of each relay.

- Assign de-energized or energized normal operation
- Select steady or flashing function
- Select latching or non-latching mode
- Select horn re-annunciation interval
- Select digital input usage, and assign to any output relay
- Set ON/OFF time delay

Sub Menu “SP Setup”

Enter and/or change parameters of each sensor point.

- Activate/deactivate sensor point
- Lock/unlock sensor point
- Alarm on rising or falling value
- Select sensor point type (gas, temperature, humidity)
- Select full scale measuring range
- Select sensor signal
- Select stage/setpoint 1 to 5
- Select hysteresis
- Set delay ON/OFF time
- Select current or average mode
- Assign sensor point fault to stage level activation
- Assign setpoint 1 to 5 to any output relay
- Assign to analog output

Sub Menu “Data Logger”

- Set data logger ON/OFF
- Set sensor data logging ON/OFF
- Set sensor data logging interval
- Set alarm (“stage status”) logging ON/OFF
- Set system error logging ON/OFF

Sub Menu “System Setup”

Enter and/or change system parameters.

- Select service mode ON/OFF
- Set next maintenance date
- Select service phone number
- Select averaging function, time and overlay, of any SP
- Set date, time and time format
- Change customer password
- Select analog output function
- Set failure relay
- Select power ON time (alarm suppression)
- Select appropriate hardware configuration
- Assign relay multiplication

FIELD WIRING CONFIGURATION

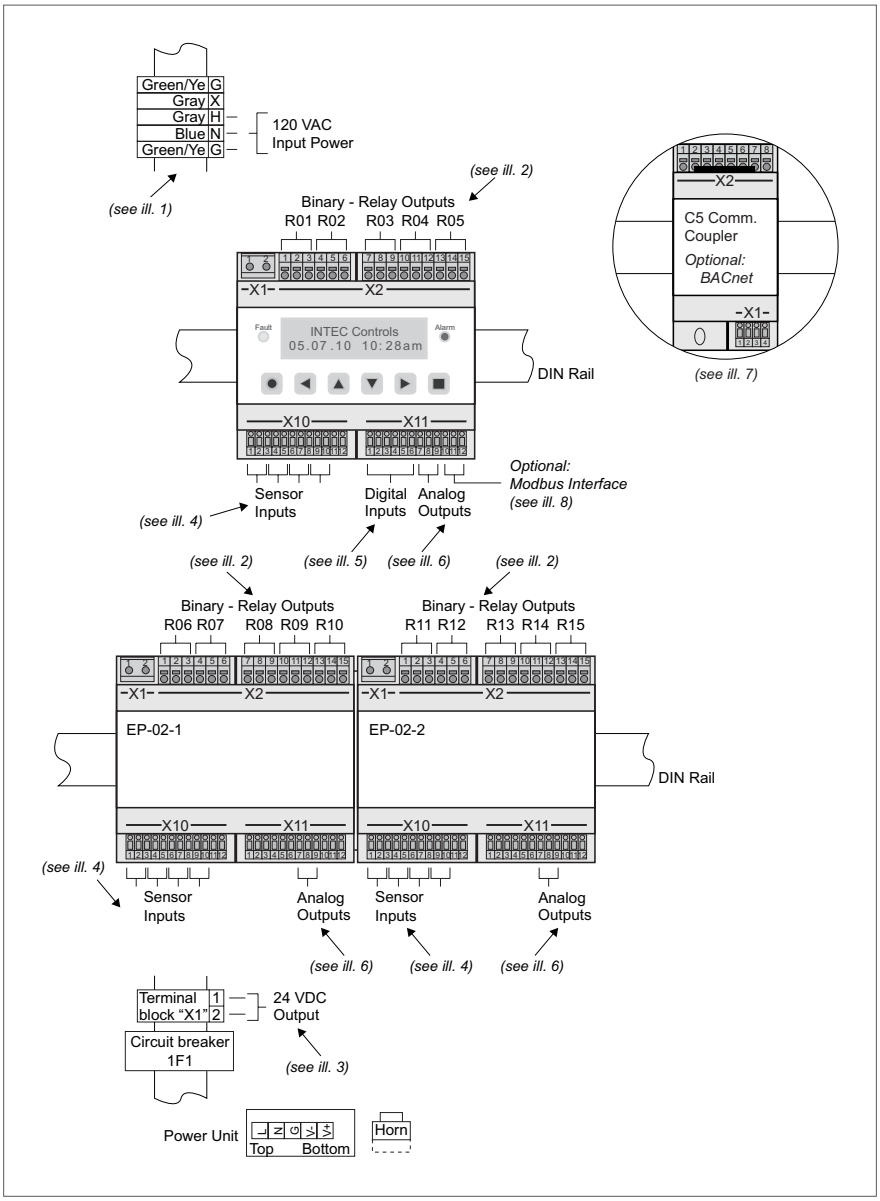

Recommended

- ***Twisted, shielded wire for analog inputs*** *(Shield to be terminated and connected only at the sensor/transmitter location or controller)*
- ***Grounded housing***
- ***Do not ground at both ends!***

Caution:

The non-metallic enclosure does not provide grounding between conduit connections. Use grounding bushings and jumper wires.

The enclosure is to be mounted using the mounting holes located in the base external to the equipment cavity, or the equivalent.

The conduit hubs must be connected to the conduit before connected to the enclosure.

When connecting conduit to the enclosure use only UL listed or UL recognized conduit hubs that have the same environmental type rating as the MGC2 enclosure.

C5 BACnet Communication Coupler, optional

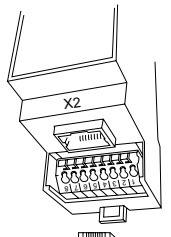

ill. 7

120 VAC Input Power Supply

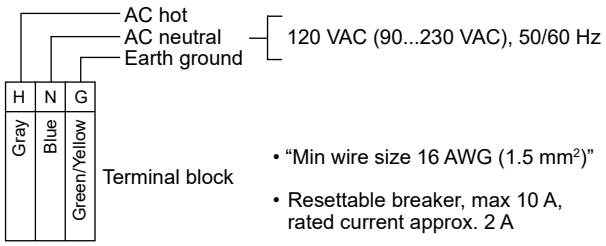

- "Min wire size 16 AWG (1.5 mm²)"
- Resettable breaker, max 10 A, rated current approx. 2 A

ill. 1

ill. 8

Modbus Interface, optional
(Located at Controller module)

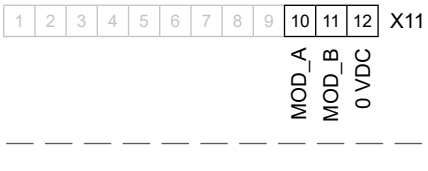

FIELD WIRING CONFIGURATION (cont...)

Binary - Relay Outputs "R01 to R15"

(Located at Controller module, EP-02-1 & EP-02-2 modules)

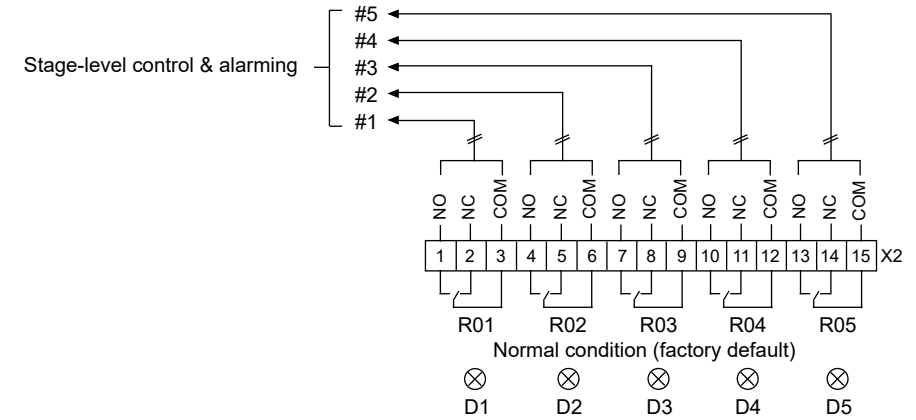

⊗ = Relay status LEDs D1 to D5 located below terminal connection of sensor inputs (X10)

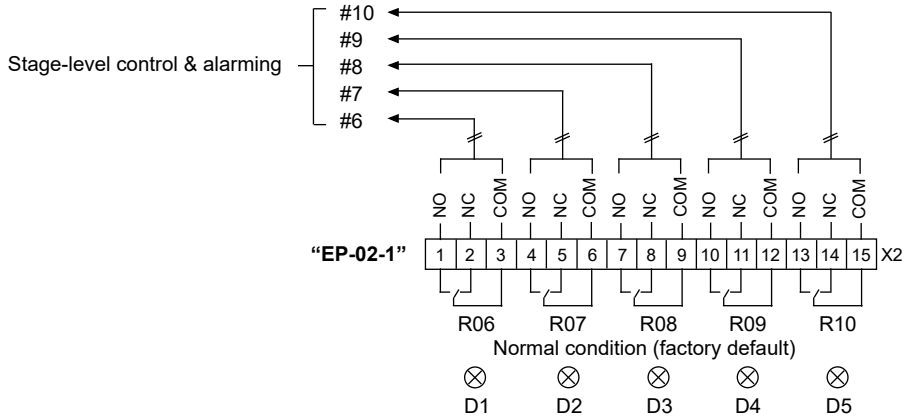

⊗ = Relay status LEDs D1 to D5 located below terminal connection of sensor inputs (X10)

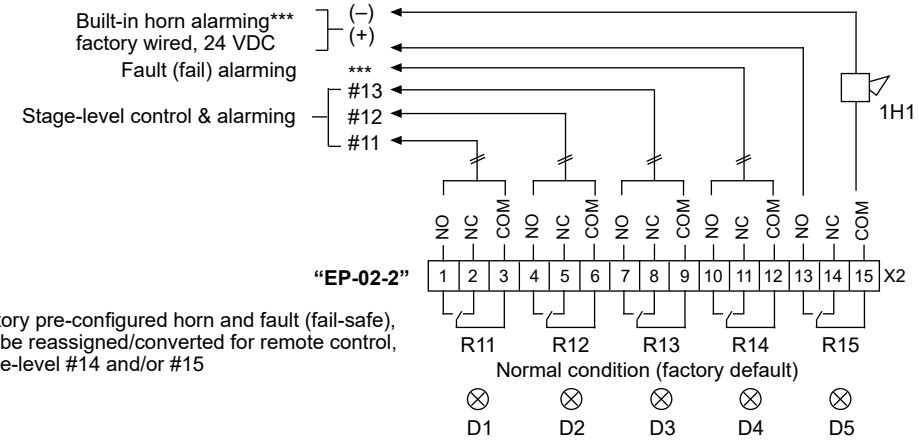

*** Factory pre-configured horn and fault (fail-safe), can be reassigned/converted for remote control, stage-level #14 and/or #15

⊗ = Relay status LEDs D1 to D5 located below terminal connection of sensor inputs (X10)

ill. 2

FIELD WIRING CONFIGURATION (cont...)

24 VDC Output Supply

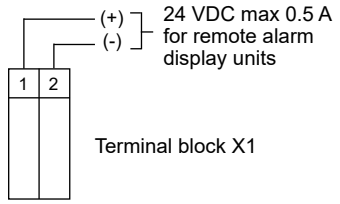

ill. 3

Sensor Inputs "SP01 to SP12"

(Located at Controller module, EP-02-1 & EP-02-2)

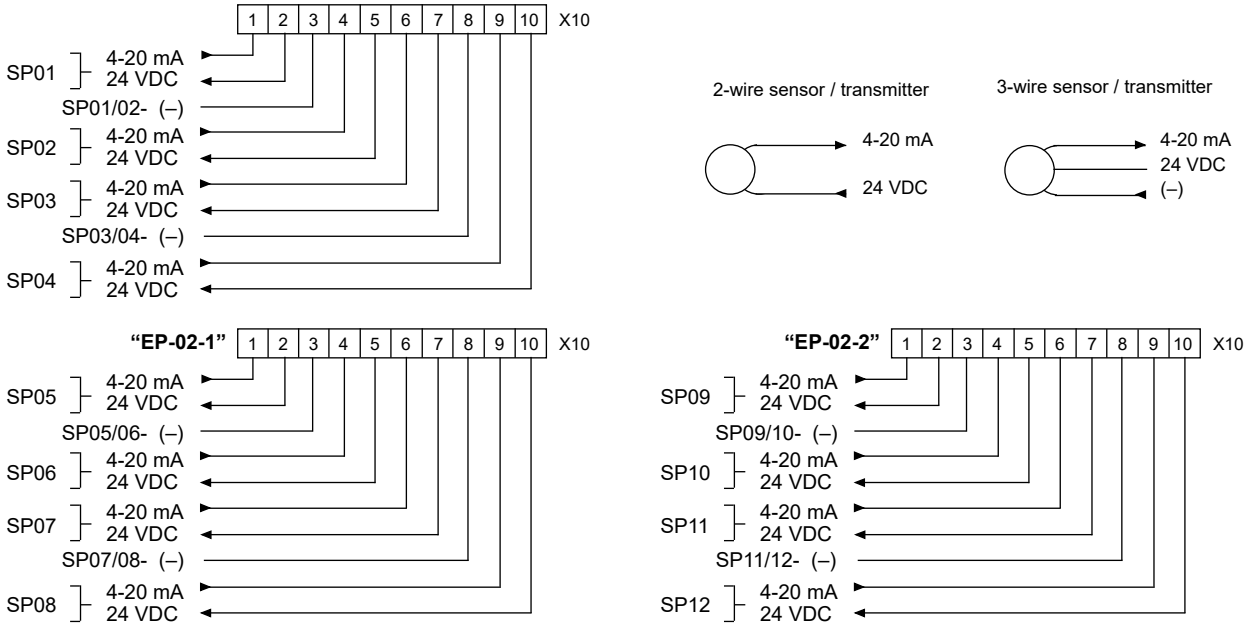

ill. 4

Digital Inputs "DI01 to DI04"

(Located at Controller module)

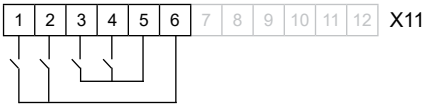

ill. 5

ill. 7 & ill. 8, see page 5

Analog Outputs "AO01 to AO06"

(Located at Controller module, EP-02-1, EP-02-2 modules)

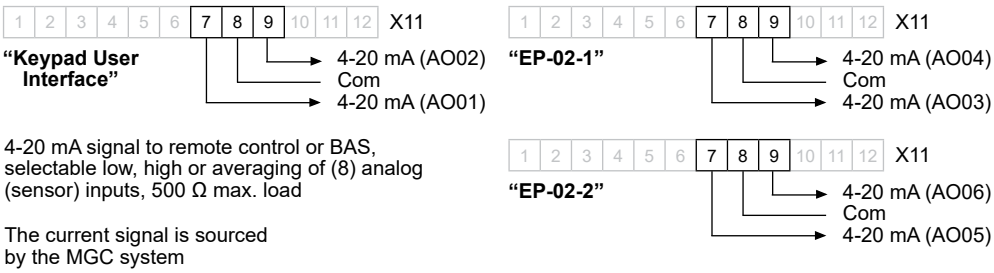

4-20 mA signal to remote control or BAS, selectable low, high or averaging of (8) analog (sensor) inputs, 500 Ω max. load

The current signal is sourced by the MGC system

ill. 6