INTEC CONTROLS

2F..

APPLICATION AND USE

2F.. series valves are used to control fluids belonging to the group showed in the table according to article 13 of 2014/68/UE directive (PED) in air-conditioning, thermoventilation and heating plants and in industrial processes; therefore, they cannot be employed as safety valves.

MANUFACTURING CHARACTERISTICS

They consist in a two-way simple seat valve body to be assembled on an electrical bidirectional actuator.

CE

Model / Technical data	2FGB 1 - 6"	2FGA 1/2 - 4"	2FSA 1" - 2 1/2"	2FAA 1/2 - 3"	2FAA.P 1/2 - 3"	2FAA.T 1/2 - 3"
Construction	ANSI 125	ANSI 125	ANSI 150	ANSI 300	ANSI 300	ANSI 300
Body	flake cast iron	hydraulic cast iron	spheroidal cast iron	steel	steel	steel
Seat	flake cast iron	stainless steel	steel	stainless steel	stainless steel	stainless steel
Plug	brass (1-4") bronze (1-6")	stainless steel	steel	stainless steel	stainless steel	stainless steel
Stem (Ø 9mm)	stainless steel	stainless steel	stainless steel	stainless steel	stainless steel	stainless steel
Control characteristics	equalpercentage	equalpercentage	equalpercentage	equalpercentage	equalpercentage	equalpercentage
Stem packing	EPDM O-ring (4)	Teflon V-ring	Teflon V-ring	Teflon V-ring	(2)	(2)
Max. fluid temp °C (°F)	150 (302°F)	200 (392°F)	230 (446°F)	230 (446°F)	350 (662°F)	230 (446°F)
Min. fluid temp °C (°F)	-10 (14°F) (1)	-10 (14°F) (1)	-10 (14°F) (1)	-10 (14°F) (1)	-10 (14°F) (1)	-20 (-4°F) (1)
Storage temperature	-20 to 60°C (-4 to 140°F)					
Fluid (4)	Group 2	Group 2	Group 2	Group 2	Group 1	Group 1
Connections	Flanged	Flanged	Flanged	Flanged	Flanged	Flanged
Leakage % Kvs/Cvs (5)	0.03	0.02	0.02	0.02	0.02	0.02
Lowered stem action	normally open	normally closed	normally open	normally closed	normally closed	normally closed

(1) For applications with possible ice formation on stem and gasket, see 248 accessory.
(2) Graphite packing for high temp.; forced lubrication on extended neck. Teflon gasket for low temperatures, see (3).
(3) Double O-ring and graphited teflon scraper ring.
(4) Group 1: just diathermic oil. For different fluids, please contact our Sales Support.
Group 2: water, overheated water, glycol added water 50% max., steam. For different fluids, please contact our Sales Support.
(5) Leakage is measured according to the EN1349 standard.

ACCESSORIES

248	Stem heater for applications on -10°C (14°F) low temperature fluid with MVH and MVE actuators
GVB40	Thermal insulation for 1 1/2" for 2FGB40 valves
GVB50	Thermal insulation for 2" for 2FGB50 valves
GVB65	Thermal insulation for 2 1/2" for 2FGB65 valves
GVB80	Thermal insulation for 3" for 2FGB80 valves
GVB100	Thermal insulation for 4" for 2FGB100 valves
GVB125	Thermal insulation for 5" for 2FGB125 valves
GVB150	Thermal insulation for 6" for 2FGB150 valves
GVB40PS89	Thermal insulation for 1 1/2" for 2FGB40PS89 valves
GVB50PS89	Thermal insulation for 2" for 2FGB50PS89 valves
GVB65PS89	Thermal insulation for 2 1/2" for 2FGB65PS89 valves
GVB80PS89	Thermal insulation for 3" for 2FGB80PS89 valves
GVB100PS89	Thermal insulation for 4" for 2FGB100PS89 valves
GVB125PS89	Thermal insulation for 5" for 2FGB125PS89 valves

ACTUATORS TECHNICAL CHARACTERISTICS, ELECTRICAL WIRING DIAGRAM AND INSTALLATION

See actuators data sheets and mounting instructions. Kvs is the flow rate in m^3/h of water at a temperature between 5°C (41°F) and 40°C (104°F) passing through a valve open at nominal stroke with 100 kPa (14.5 PSI) (1 bar) differential pressure.

MAX DIFFERENTIAL AND CLOSE-OFF PRESSURE [kPa (PSI)]

MODEL	Size	Kvs (Cvs)	MVH	MVHA/C*	MVH3K	MVE.06	MVE.10	MVE.15	MVE.22
			A-AB	A-AB	A-AB	A-AB	A-AB	A-AB	A-AB
2FGA	1/2" R0	0.6 (0.69)	1600 (232)	1600 (232)	1600 (232)	1600 (232)	1600 (232)	1600 (232)	1600 (232)
	1/2" R1	1 (1.16)							
	1/2" R2	1.6 (1.85)							
	1/2" R3	2.5 (2.89)							
	1/2"	4 (4.62)	1600 (232)	1600 (232)	1600 (232)	1600 (232)	1600 (232)	1600 (232)	1600 (232)
	3/4"	6.3 (7.28)	1600 (232)	1510 (219)	1600 (232)	1250 (181)	1600 (232)	1600 (232)	1600 (232)
	1"	10 (11.56)	1600 (232)	920 (133)	1600 (232)	760 (110)	1410 (204)	1600 (232)	1600 (232)
	1 1/4"	16 (18.5)	1600 (232)	920 (133)	1600 (232)	760 (110)	1410 (204)	1600 (232)	1600 (232)
	1 1/2"	24 (27.74)	1340 (194)	620 (90)	1600 (232)	510 (74)	950 (138)	1500 (218)	1600 (232)
	2"	32 (36.99)	870 (126)	400 (58)	1600 (232)	330 (48)	620 (90)	980 (142)	1480 (215)
	2 1/2"	63 (72.83)	350 (51)	160 (23)	830 (120)	130 (19)	250 (36)	400 (58)	610 (88)
	3"	110 (127.16)	230 (33)	100 (15)	550 (80)	80 (12)	160 (23)	260 (38)	400 (58)
	4"	140 (161.84)	140 (20)	60 (9)	350 (51)	50 (7)	100 (15)	160 (23)	250 (36)
2FAA 2FAA..P 2FAA..T	1/2" R2	1.6 (1.85)	3000 (435)	3000 (435)	3000 (435)	3000 (435)	3000 (435)	4000 (580)	4000 (580)
	1/2"	4 (4.62)	3000 (435)	1870 (271)	3000 (435)	1450 (210)	3210 (466)	4000 (580)	4000 (580)
	3/4"	6.3 (7.28)	2840 (412)	1110 (161)	3000 (435)	850 (123)	1900 (276)	3220 (467)	4000 (580)
	1"	10 (11.56)	1740 (252)	670 (97)	3000 (435)	510 (74)	1160 (168)	1980 (287)	3110 (451)
	1 1/4"	16 (18.5)	1740 (252)	670 (97)	3000 (435)	510 (74)	1160 (168)	1980 (287)	3110 (451)
	1 1/2"	24 (27.74)	1170 (170)	450 (65)	2920 (423)	340 (49)	780 (113)	1330 (193)	2100 (305)
	2"	32 (36.99)	760 (110)	290 (42)	1910 (277)	220 (32)	510 (74)	870 (126)	1370 (199)
	2 1/2"	63 (72.83)	310 (45)	110 (16)	790 (115)	80 (12)	200 (29)	350 (51)	560 (81)
	3"	110 (127.16)	200 (29)	70 (10)	520 (75)	50 (7)	130 (19)	230 (33)	370 (54)
2FGB	1" R4	4 (4.62)	1600 (232)	1100 (160)	1600 (232)	940 (136)	1590 (231)	1600 (232)	1600 (232)
	1" R7	6.3 (7.28)	1600 (232)	1100 (160)	1600 (232)	940 (136)	1590 (231)	1600 (232)	1600 (232)
	1"	10 (11.56)	1600 (232)	1100 (160)	1600 (232)	940 (136)	1590 (231)	1600 (232)	1600 (232)
	1 1/4" (1)	19 (21.96)	1170 (170)	590 (86)	1600 (232)	500 (73)	860 (125)	1300 (189)	1600 (232)
	1 1/2"	19 (21.96)	1170 (170)	590 (86)	1600 (232)	500 (73)	860 (125)	1300 (189)	1600 (232)
	1 1/2"	25 (28.9)	1170 (170)	590 (86)	1600 (232)	500 (73)	860 (125)	1300 (189)	1600 (232)
	2"	40 (46.24)	730 (106)	360 (52)	1600 (232)	310 (45)	530 (77)	810 (117)	1200 (174)
	2 1/2"	63 (72.83)	430 (62)	210 (30)	960 (139)	180 (26)	310 (45)	480 (70)	710 (103)
	3"	100 (115.6)	280 (41)	130 (19)	620 (90)	110 (16)	200 (29)	310 (45)	460 (67)
	4"	130 (150.28)	170 (25)	80 (12)	390 (57)	70 (10)	120 (17)	190 (28)	290 (42)
	5"	200 (231.2)	100 (15)	50 (7)	240 (35)	40 (6)	70 (10)	120 (17)	180 (26)
	6"	300 (346.8)	70 (10)	30 (4)	160 (23)	30 (4)	50 (7)	80 (12)	120 (17)
2FSA	1" R4	4 (4.62)	2500 (363)	2150 (312)	2500 (363)	1850 (268)	2500 (363)	2500 (363)	2500 (363)
	1" R7	6.3 (7.28)	2150 (312)	1080 (157)	2500 (363)	930 (135)	1580 (229)	2390 (347)	2500 (363)
	1"	10 (11.56)	2150 (312)	1080 (157)	2500 (363)	930 (135)	1580 (229)	2390 (347)	2500 (363)
	1 1/4"	16 (18.5)	1450 (210)	730 (106)	2500 (363)	620 (90)	1060 (154)	1610 (234)	2390 (347)
	1 1/2"	25 (28.9)	1040 (151)	520 (75)	2310 (335)	440 (64)	760 (110)	1160 (168)	1720 (249)
	2"	40 (46.24)	660 (96)	330 (48)	1470 (213)	280 (41)	480 (70)	740 (107)	1090 (158)
	2 1/2"	63 (72.83)	390 (57)	190 (28)	860 (125)	160 (23)	280 (41)	430 (62)	640 (93)
2FGBxxPS89	1 1/2"	25 (28.9)	1170 (170)	590 (86)	1600 (232)	500 (73)	860 (125)	1300 (189)	1600 (232)
	2"	40 (46.24)	730 (106)	360 (52)	1600 (232)	310 (45)	530 (77)	810 (117)	1200 (174)
	2 1/2"	63 (72.83)	430 (62)	210 (30)	960 (139)	180 (26)	310 (45)	480 (70)	710 (103)
	3"	100 (115.6)	280 (41)	130 (19)	620 (90)	110 (16)	200 (29)	310 (45)	460 (67)
	4"	130 (150.28)	170 (25)	80 (12)	390 (57)	70 (10)	120 (17)	190 (28)	290 (42)
	5"	200 (231.2)	100 (15)	50 (7)	240 (35)	40 (6)	70 (10)	120 (17)	180 (26)

(1) Same dimensions as a 1 1/2" valve

* 2FGB-2FSA valves: in emergency MVH.A valve closed; MVH.C valve open.
2FGA-2FAA valves: in emergency MVH.A valve open; MVH.C valve closed.

100 kPa = 1 bar = 14.5 PSI

Kv is the flow rate expressed in m3/h of water at a temperature between 5°C (41°F) and 40°C (104°F) passing through a valve open at the nominal stroke with 100 kPa (14.5 PSI) (1 bar) differential pressure.

Cv is the volume (in US gallons) of water at 60°F that will flow per minute across a valve with a pressure drop of 1 PSI.

MAX REGULATION DIFFERENTIAL PRESSURE [kPa (PSI)]

The max regulation differential pressure, it means the pressure which can be used during the stroke, is conditioned by wear between seat and plug and by the performance guaranteed by the actuator for the evaluated valve. So we recommend not to overcome the differential pressure whose value corresponds to the minimum between the one here following (maximum admitted value not to cause wear) and the one shown in the previous table (max close-off differential pressure).

2FGB = 200 kPa (29 PSI)
2FGA = 600 kPa (87 PSI)
2FSA = 800 kPa (116 PSI)
2FAA/2FAAP/2FAAT = 1200 kPa (174 PSI)

Note: The max operating pressures at different temperatures for various classes must correspond to the following standards.

INSTALLATION

Hydraulic connections:
Respect the fluid direction as indicated by the arrow on the valve body or, in case letters are used with inlet in A and outlet AB.

Valve mounting:
Before mounting the valve, make sure pipes are clean, free from welding slags. The pipes must be perfectly aligned with the valve body and not subjected to vibrations. For installations on plants with high temperature fluids (steam, overheated water, diathermic oil) use expansion joints to avoid the dilatation of pipes to stress the valve body. Install the valves with the actuator in vertical position for fluid temperature up to 120°C (248°F); with higher temperatures they should be mounted horizontally.
Avoid the valve installation in plants which are considered aggressive and/or corrosive for valve materials.
Please contact our Sales Support in order to define which potentially aggressive or polluting substances can be used.
We disclaim all responsibility in case of valve failure due to external fortuitous events (fire, earthquakes etc.).

Notes: The actuator can be rotated with respect to the valve body by blocking the ring nut; after such operation re-tighten the ring nut.

OVERALL DIMENSIONS [mm (inch)]

2FGB

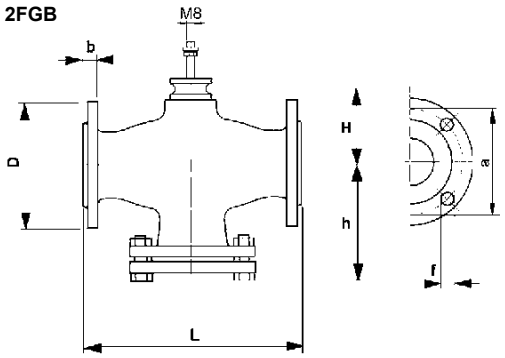

2FSA

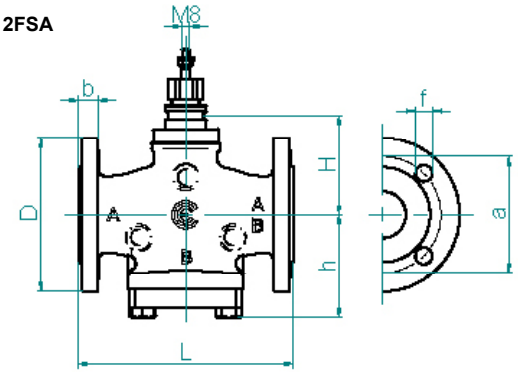

2FGA/2FAA

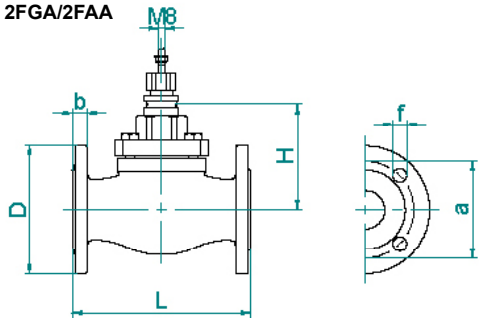

2FA.P

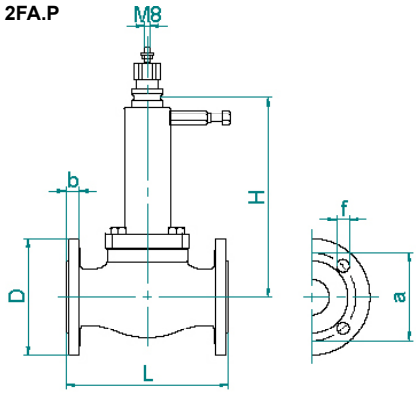

MODEL	Size	L	H	h	D	b	a	f	Holes nr.	Weight [kg(lb)]	Stroke [mm(inch)]
2FGB ANSI 125	1"	160 (6.3")	50 (2")	106 (4.2")	115 (4.5")	16 (0.6")	79 (3.1")	16 (0.6")	4	6.8 (15 lb)	16.5 (0.6")
	1 1/4" (1)	200 (7.9")	64 (2.5")	128 (5")	150 (5.9")	18 (0.7")	89 (3.5")	16 (0.6")	4	12 (26.5 lb)	25 (1")
	1 1/2"	200 (7.9")	64 (2.5")	128 (5")	150 (5.9")	18 (0.7")	98 (3.9")	16 (0.6")	4	12 (26.5 lb)	25 (1")
	2"	230 (9.1")	66 (2.6")	145 (5.7")	165 (6.5")	20 (0.8")	121 (4.8")	19 (0.8")	4	17 (37.5 lb)	25 (1")
	2 1/2"	290 (11.4")	84 (3.3")	175 (6.9")	185 (7.3")	20 (0.8")	140 (5.5")	19 (0.8")	4	23 (50.7 lb)	25 (1")
	3"	310 (12.2")	94 (3.7")	187 (7.4")	200 (7.9")	22 (0.9")	152 (6")	19 (0.8")	4	30 (66.1 lb)	45 (1.8")
	4"	350 (13.8")	105 (4.1")	207 (8.1")	220 (8.7")	22 (0.9")	191 (7.5")	19 (0.8")	8	45.6 (100.5 lb)	45 (1.8")
	5"	400 (15.7")	128 (5")	234 (9.2")	250 (9.8")	24 (0.9")	216 (8.5")	22 (0.9")	8	55 (121.3 lb)	45 (1.8")
	6"	480 (18.9")	146 (5.7")	277 (10.9")	285 (11.2")	24 (0.9")	241 (9.5")	22 (0.9")	8	71 (156.5 lb)	45 (1.8")
2FGA ANSI 125	1/2"	130 (5.1")	107 (4.2")	--	95 (3.7")	16 (0.6")	60 (2.4")	16 (0.6")	4	3.5 (7.7 lb)	16.5 (0.6")
	3/4"	150 (5.9")	109 (4.3")	--	105 (4.1")	16 (0.6")	70 (2.8")	16 (0.6")	4	4.5 (9.9 lb)	16.5 (0.6")
	1"	160 (6.3")	112 (4.4")	--	115 (4.5")	16 (0.6")	79 (3.1")	16 (0.6")	4	5.5 (12.1 lb)	16.5 (0.6")
	1 1/4"	180 (7.1")	121 (4.8")	--	140 (5.5")	18 (0.7")	89 (3.5")	16 (0.6")	4	8.7 (19.2 lb)	25 (1")
	1 1/2"	200 (7.9")	129 (5.1")	--	150 (5.9")	18 (0.7")	98 (3.9")	16 (0.6")	4	10.3 (22.7 lb)	25 (1")
	2"	230 (9.1")	137 (5.4")	--	165 (6.5")	20 (0.8")	121 (4.8")	19 (0.8")	4	13.7 (30.2 lb)	25 (1")
	2 1/2"	270 (10.6")	175 (6.9")	--	185 (7.3")	20 (0.8")	140 (5.5")	19 (0.8")	4	19.6 (43.2 lb)	25 (1")
	3"	310 (12.2")	190 (7.5")	--	200 (7.9")	22 (0.9")	152 (6")	19 (0.8")	4	31.7 (69.9 lb)	45 (1.8")
	4"	350 (13.8")	215 (8.5")	--	220 (8.7")	24 (0.9")	191 (7.5")	19 (0.8")	8	43.5 (95.9 lb)	45 (1.8")
2FAA ANSI 300	1/2"	130 (5.1")	107 (4.2")	--	95 (3.7")	16 (0.6")	67 (2.6")	16 (0.6")	4	4.1 (9 lb)	16.5 (0.6")
	3/4"	150 (5.9")	109 (4.3")	--	105 (4.1")	16 (0.6")	83 (3.3")	19 (0.8")	4	5.1 (11.2 lb)	16.5 (0.6")
	1"	160 (6.3")	112 (4.4")	--	115 (4.5")	16 (0.6")	89 (3.5")	19 (0.8")	4	6.1 (13.4 lb)	16.5 (0.6")
	1 1/4"	180 (7.1")	121 (4.8")	--	140 (5.5")	18 (0.7")	98 (3.9")	19 (0.8")	4	10.1 (22.3 lb)	25 (1")
	1 1/2"	200 (7.9")	152 (6")	--	150 (5.9")	18 (0.7")	114 (4.5")	22 (0.9")	4	12.3 (27.1 lb)	25 (1")
	2"	230 (9.1")	160 (6.3")	--	165 (6.5")	20 (0.8")	127 (5")	19 (0.8")	8	17 (37.5 lb)	25 (1")
	2 1/2"	270 (10.6")	175 (6.9")	--	185 (7.3")	20 (0.8")	149 (5.9")	22 (0.9")	8	23.8 (52.5 lb)	25 (1")
	3"	310 (12.2")	190 (7.5")	--	200 (7.9")	22 (0.9")	168 (6.6")	22 (0.9")	8	32 (70.5 lb)	45 (1.8")
2FSA ANSI 150	1"	160 (6.3")	92 (3.6")	83 (3.3")	115 (4.5")	18 (0.7")	79 (3.1")	16 (0.6")	4	6 (13.2 lb)	16.5 (0.6")
	1 1/4"	180 (7.1")	97 (3.8")	102 (4")	140 (5.5")	18 (0.7")	89 (3.5")	16 (0.6")	4	10 (22 lb)	25 (1")
	1 1/2"	200 (7.9")	98 (3.9")	104 (4.1")	150 (5.9")	18 (0.7")	98 (3.9")	16 (0.6")	4	11 (24.3 lb)	25 (1")
	2"	230 (9.1")	107 (4.2")	110 (4.3")	165 (6.5")	20 (0.8")	121 (4.8")	19 (0.8")	4	16 (35.3 lb)	25 (1")
	2 1/2"	270 (10.6")	117 (4.6")	124 (4.9")	185 (7.3")	22 (0.9")	140 (5.5")	19 (0.8")	4	20 (44.1 lb)	25 (1")
2FAAP 2FAAT ANSI 300	1/2"	130 (5.1")	178 (7")	--	95 (3.7")	16 (0.6")	67 (2.6")	16 (0.6")	4	6.2 (13.7 lb)	16.5 (0.6")
	3/4"	150 (5.9")	180 (7.1")	--	105 (4.1")	18 (0.7")	83 (3.3")	19 (0.8")	4	8.3 (18.3 lb)	16.5 (0.6")
	1"	160 (6.3")	183 (7.2")	--	115 (4.5")	18 (0.7")	89 (3.5")	19 (0.8")	4	8.6 (19 lb)	16.5 (0.6")
	1 1/4"	180 (7.1")	269 (10.6")	--	140 (5.5")	18 (0.7")	98 (3.9")	19 (0.8")	4	14.7 (32.4 lb)	25 (1")
	1 1/2"	200 (7.9")	277 (10.9")	--	150 (5.9")	18 (0.7")	114 (4.5")	22 (0.9")	4	15.4 (34 lb)	25 (1")
	2"	230 (9.1")	285 (11.2")	--	165 (6.5")	20 (0.8")	127 (5")	19 (0.8")	8	25 (55.1 lb)	25 (1")
	2 1/2"	270 (10.6")	300 (11.8")	--	185 (7.3")	22 (0.9")	149 (5.9")	22 (0.9")	8	29 (63.9 lb)	25 (1")
	3"	310 (12.2")	315 (12.4")	--	200 (7.9")	24 (0.9")	168 (6.6")	22 (0.9")	8	38 (83.8 lb)	45 (1.8")

(1) Same dimensions as a 1 1/2" valve