# 2FAA.B

| MODEL | Size | ANSI | Kvs(Cvs)* [$m^3$/h] |
|---|---|---|---|
| 2FAA25B | 1" | ANSI 300 | 10 (11.56) |
| 2FAA32B | 1 1/4" | | 16 (18.50) |
| 2FAA40B | 1 1/2" | | 25 (28.90) |
| 2FAA50B | 2" | | 40 (46.24) |
| 2FAA65B | 2 1/2" | | 63 (72.83) |
| 2FAA80B | 3" | | 100 (115.60) |
| 2FAA100B | 4" | | 160 (184.96) |
| 2FAA125B | 5" | | 200 (231.20) |

Kv is the flow rate expressed in m3/h of water at a temperature between 5°C (41°F) and 40°C (104°F) passing through a valve open at the nominal stroke with 100 kPa (14.5 PSI) (1 bar) differential pressure.

Cv is the volume (in US gallons) of water at 60°F that will flow per minute across a valve with a pressure drop of 1 PSI.

## APPLICATION AND USE

2FAA.B balanced valve bodies are designed for use in air-conditioning, thermoventilation and heating systems and in industrial process and they cannot be used as safety valves. They can be employed to control fluids belonging to group 2 according to the article 13 of 2014/68/UE directive (PED).
Group 2 includes water, overheated water, steam. For fluids belonging to group 2 differing from the ones listed above, please contact our Sales Support.
The peculiar characteristic of such valves is they can operate under high close off pressure and wherever low leakage is required. This makes them particularly suitable in applications with high pressure and high DT, such as overheated water (i.e. remote control, boiler supply) and steam.

## MANUFACTURING CHARACTERISTICS

| | |
|---|---|
| Valve body: | Steel |
| Seat, Plug, Stem: | Stainless steel |
| Balancing gasket: | Teflon ring with steel spring |
| Stem packing: | Teflon |

## TECHNICAL CHARACTERISTICS

| | |
|---|---|
| Connections Control | ANSI 300 flanges; |
| characteristic Leakage | Equal percentage; |
| (% of Kvs/Cvs) | 0.02; |
| Allowed fluids: | |
| - water: min. temperature: | -20°C (-4°F)(1) |
| glycol added | max 50% |
| - overheated water: max temp. | 230°C (446°F)(2) |
| - steam: max pressure | 1200 kPa (174 PSI) |
| max temperature | 230°C (446°F) |
| Storage temperature: | -20 to 60°C (-4 to 140°F) |
| Weight: | see dimensions picture. |

(1) See 248 accessory.
(2) Temperature/pressure ratio according to the standard UNI12516-1.

### Reference standards

Control valves for hot water heating plant: UNI 9753
Flow characteristics: IEC 534-2-4
Leakage: measured according to the EN1349 standard.

## INSTALLATION

### Hydraulic connections

Respect the fluid directions: inlet is labelled by A and outlet by AB.

### Valve mounting

Before mounting the valve, make sure pipes are clean, free from welding slags. The pipes must be perfectly aligned with the valve body and not subjected to vibrations.
For installations on plants with high temperature fluids (steam, overheated water) use expansion joints to avoid the dilatation of pipes to stress the valve body.
In any case, avoid installing the valve in plants which are considered aggressive and/or corrosive for valve materials.
Please contact our Sales Support in order to define which potentially aggressive or polluting substances can be used.
We disclaim all responsibility in case of valve failure due to external fortuitous events (fire, earthquakes etc.).
Mount the valves with the actuator in vertical position with fluid tem-perature up to 120°C (248°F). For higher temperatures, the valves must be mounted horizontally, otherwise the use of the MVHT accessory is required.
NOTE: Following the hydraulic installation it is necessary to check the tight of the stem packing placed on the bonnet, both in cases of low and high temperatures. The valves require periodic maintenance.

## OPERATION

With stem up the valve is closed, with stem down the valve is in open.

## ACTUATORS TECHNICAL CHARACTERISTICS, WIRING DIAGRAM AND INSTALLATION

See MVH, MVHA/C and MVE actuators data sheets and mounting instructions.

## ACCESSORIES

**248** Stem heater for applications with possible ice formation on stem and packing.

**MVHT** Valve body actuator spacer to reduce the direct exposure of the actuator when installed on a valve with high temperature fluids.

Dimensions: Ø 120 mm; h = actuator height + 102 mm.

Dimensions: Ø 14.7"; h = actuator height + 4.0".

## MAX CLOSE-OFF DIFFERENTIAL PRESSURE [kPa (PSI)]

| U-Bolt Connection | Size | MVH | MVHA/C* | MVE.06 | MVE.10 | MVE.15 | MVE.22 |
|---|---|---|---|---|---|---|---|
| 2FAA.B | 1" | 3000 (435) | 3000 (435) | 3000 (435) | 3000 (435) | 3000 (435) | 4000 (580) |
| | 1" | 3000 (435) | 3000 (435) | 3000 (435) | 3000 (435) | 3000 (435) | 4000 (580) |
| | 1" | 3000 (435) | 3000 (435) | 3000 (435) | 3000 (435) | 3000 (435) | 4000 (580) |
| | 1 1/4" | 3000 (435) | 3000 (435) | 3000 (435) | 3000 (435) | 3000 (435) | 4000 (580) |
| | 1 1/2" | 3000 (435) | 3000 (435) | 2760 (400) | 3000 (435) | 3000 (435) | 4000 (580) |
| | 2" | 3000 (435) | 2810 (408) | 2100 (305) | 3000 (435) | 3000 (435) | 4000 (580) |
| | 2 1/2" | 3000 (435) | 2040 (296) | 1490 (216) | 3000 (435) | 3000 (435) | 4000 (580) |
| | 3" | 3000 (435) | 1550 (225) | 1100 (160) | 2960 (429) | 3000 (435) | 4000 (580) |
| | 4" | 3000 (435) | 950 (138) | 650 (94) | 1910 (277) | 3000 (435) | 3492 (506) |
| | 5" | 2330 (338) | 660 (96) | 420 (61) | 1430 (207) | 2700 (392) | 2700 (392) |

* MVH.A in emergency closes the valve; MVH.C in emergency opens the valve.

100 kPa = 1 bar = 14.5 PSI

Kv is the flow rate expressed in m3/h of water at a temperature between 5°C (41°F) and 40°C (104°F) passing through a valve open at the nominal stroke with 100 kPa (14.5 PSI) (1 bar) differential pressure.

Cv is the volume (in US gallons) of water at 60°F that will flow per minute across a valve with a pressure drop of 1 PSI.

## MAX REGULATION DIFFERENTIAL PRESSURE [kPa (PSI)]

The max regulation differential pressure, it means the pressure which can be used during the stroke, is conditioned by wear between seat and plug and by the performance guaranteed by the actuator for the evaluated valve. So we recommend not to overcome the differential pressure whose value corresponds to the minimum between 1200 kPa (174 PSI) (maximum admitted value not to cause wear) and the one shown in the previous table (max close-off differential pressure).

**Note**: The max operating pressures at different temperatures for various classes must correspond to the following standards.

## DIMENSIONS [mm (inch)]

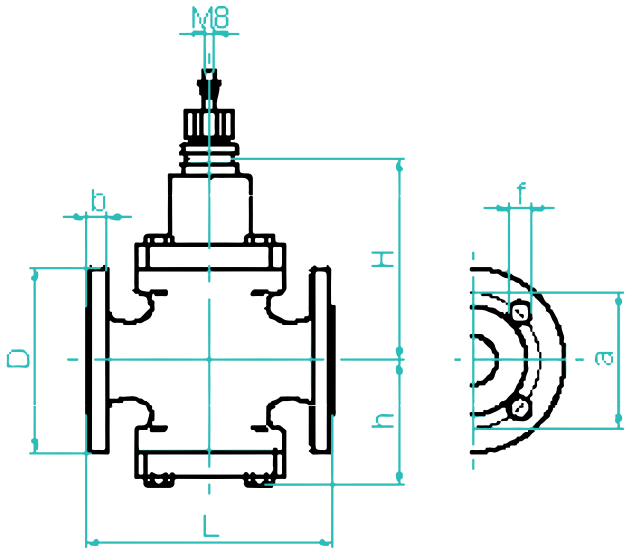


| Model | Size | L | H | h | D | b | a | f | Holes n. | Weight [kg(lb)] |
|---|---|---|---|---|---|---|---|---|---|---|
| 2FAA.B | 1" | 160 (6.3") | 124 (4.9") | 84 (3.3") | 115 (4.5") | 18 (0.7") | 89 (3.5") | 19 (0.8") | 4 | 11 (24.3 lb) |
| | 1 1/4" | 180 (7.1") | 139 (5.5") | 99 (3.9") | 140 (5.5") | 18 (0.7") | 98 (3.9") | 19 (0.8") | 4 | 16 (35.3 lb) |
| | 1 1/2" | 200 (7.9") | 165 (6.5") | 102 (4") | 150 (5.9") | 18 (0.7") | 114 (4.5") | 22 (0.9") | 4 | 18 (39.7 lb) |
| | 2" | 230 (9.1") | 168 (6.6") | 106 (4.2") | 165 (6.5") | 20 (0.8") | 127 (5") | 19 (0.8") | 8 | 21 (46.3 lb) |
| | 2 1/2" | 270 (10.6") | 183 (7.2") | 125 (4.9") | 185 (7.3") | 22 (0.9") | 149 (5.9") | 22 (0.9") | 8 | 30 (66.1 lb) |
| | 3" | 310 (12.2") | 199 (7.8") | 149 (5.9") | 200 (7.9") | 24 (0.9") | 168 (6.6") | 22 (0.9") | 8 | 44 (97 lb) |
| | 4" | 350 (13.8") | 178 (7") | 172 (6.8") | 235 (9.3") | 24 (0.9") | 200 (7.9") | 22 (0.9") | 8 | 53 (116.8 lb) |
| | 5" | 400 (15.7") | 203 (8") | 210 (8.3") | 270 (10.6") | 26 (1") | 235 (9.3") | 22 (0.9") | 8 | 83 (183 lb) |